02

Shower Units& Accessories

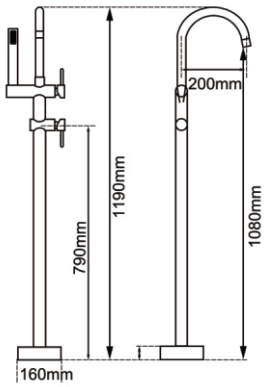

Note: With embedded box, which should be installed before flooring

CH0116.BS/OX0116.BS/BU0116.BS/ GM0116.BS/BUYG0116.BS

Finish: Chrome/Matte Black/ Brushed Nickel/ Gun Metal Grey/Brushed Yellow Gold
Material: Brass
Weight: 5.0kg
Package Size: 96X34.5X9cm

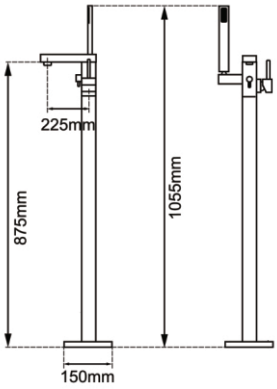

Note: With embedded box, which should be installed before flooring

CH0117.BS/OX0117.BS/ GM0117.BS/BU0117.BS

Finish: Chrome/Matte Black/ Brushed Nickel/ Gun Metal Grey
Material: Brass
Weight: 5.0kg
Package Size: 96X34.5X9cm

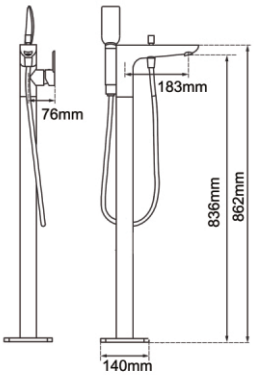

Note: With embedded box, which should be installed before flooring

CH0124.BS/OX0124.BS

Finish: Chrome/Matte Black
Material: Brass
Weight: 5.5kg
Package Size: 96X34.5X9cm

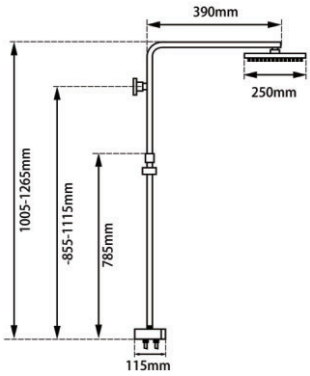

Please contact our sales team for the optional shower head/handheld shower price.

CH2125.SH.N+CH0002.SH+CH-S8.HHS
OX2125.SH.N+OX0002.SH+OX-S8.HHS
Shower Rail + Shower Head + Handheld Shower

Universal Water Inlet
Finish: Chrome/Matte Black
Main Material: Brass & SS304
Weight: 5.0kg
Package Size: 101X51X15cm

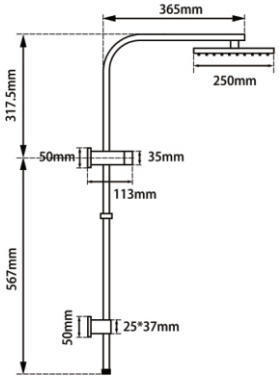

Please contact our sales team for the optional shower head/handheld shower price.

CH2130.SH.N+CH0002.SH+CH-S8.HHS
OX2130.SH.N+OX0002.SH+OX-S8.HHS
GM2130.SH (with 10" brass head)
OXRG2130.SH (with 8" S/S head)
BU2130.SH.N+BU0002.SH+BU-S5.HHS
BUYG2130.SH-10(with 10" brass head)
Shower Rail + Shower Head + Handheld Shower

Top Water Inlet
Finish: Chrome/Matte Black/Gun Metal Grey/Matte Black & Rose Gold/Brushed Nickel/Brushed Yellow Gold
Main Material: Brass & SS304
Weight: 3.5kg
Package Size: 72X51X11cm

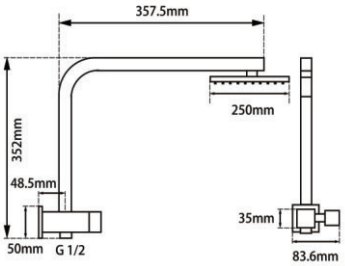

Please contact our sales team for the optional shower head/handheld shower price.

CH2140.SH.N+CH0002.SH+CH-S8.HHS
OX2140.SH.N+OX0002.SH+OX-S8.HHS
OXRG2140.SH (Shower Set)
Shower Rail + Shower Head + Handheld Shower

Top Water Inlet
Finish: Chrome/Matte Black/Matte Black & Yellow Gold
Main Material: Brass & SS304
Weight: 2.85kg
Package Size: 41.5X34.5X9cm

50mm Wide rail

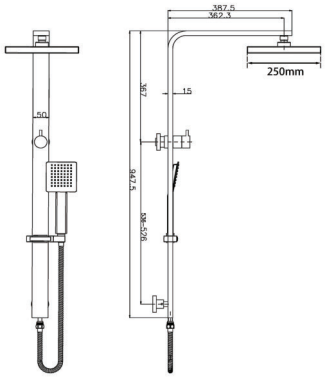

Please contact our sales team for the optional shower head/handheld shower price.

CH2150.SH.N+CH0002.SH+CH-S8.HHS
OX2150.SH.N+OX0002.SH+OX-S8.HHS
Shower Rail + Shower Head + Handheld Shower

Top Water Inlet
Finish: Chrome/Matte Black
Main Material: Brass & SS304
Weight: 5.5kg
Package Size: 27X14.5X7.5cm

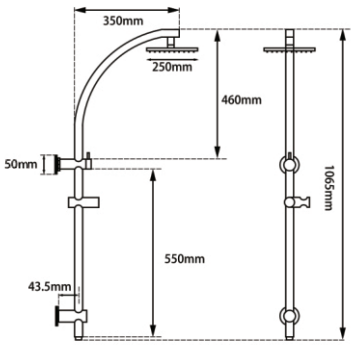

Please contact our sales team for the optional shower head/handheld shower price.

CH2128.SH.N+CH0007.SH+CH-R11.HHS
OX2128.SH.N+OX0007.SH+OX-R11.HHS
Shower Rail + Shower Head + Handheld Shower

Top Water Inlet
Finish: Chrome/Matte Black
Main Material: Brass & SS304
Weight: 3.4kg
Package Size: 72X51X11cm

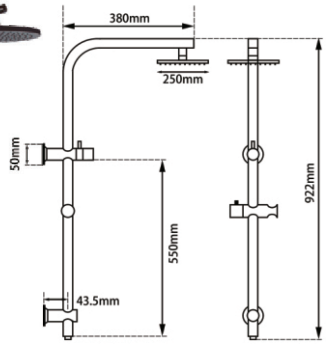

Please contact our sales team for the optional shower head/handheld shower price.

CH2128-A.SH.N+CH0007.SH+CH-R11.HHS
OX2128-A.SH.N+OX0007.SH+OX-R11.HHS
BU2128-A.SH-10(with 10" brass head)
GM2128-A.SH-10(with 10" brass head)
BUYG2128-A.SH-10(with 10" brass head)
Shower Rail + Shower Head + Handheld Shower

Top Water Inlet
Finish: Chrome/Matte Black/Brushed NickelGun Metal Grey/ Brushed Yellow Gold
Main Material: Brass & SS304
Weight: 3.55kg
Package Size: 72X51X11cm

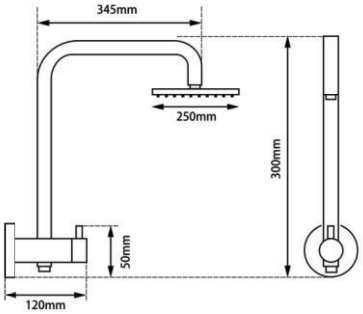

Please contact our sales team for the optional shower head/handheld shower price.

CH2138.SH.N+CH0007.SH+CH-R11.HHS
OX2138.SH.N+OX0007.SH+OX-R11.HHS
Shower Rail + Shower Head + Handheld Shower

Top Water Inlet
Finish: Chrome/Matte Black
Main Material: Brass & SS304
Weight: 1.9kg
Package Size: 57X45.1X8.5cm

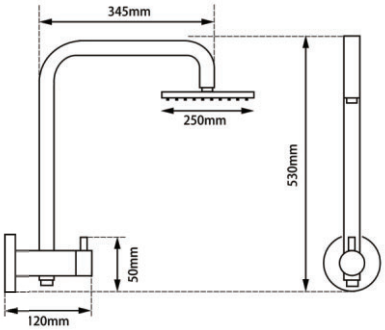

Please contact our sales team for the optional shower head/handheld shower price.

CH2138-L.SH.N+CH0007.SH+CH-R11.HHS
Shower Rail + Shower Head + Handheld Shower

Top Water Inlet
Finish: Chrome
Main Material: Brass & SS304
Weight: 1.9kg
Package Size: 57X45.1X8.5cm

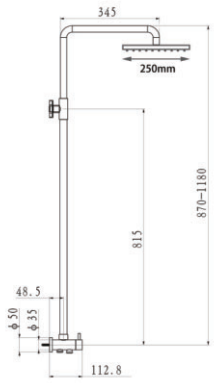

Please contact our sales team for the optional shower head/handheld shower price.

CH2152.SH.N+CH0007.SH+CH-R11.HHS
OX2152.SH.N+OX0007.SH+OX-R11.HHS
Shower Rail+Shower Head+Handheld Shower

Top Water Inlet
Finish: Chrome/Matte Black
Main Material: Brass & SS304
Weight: 3.5kg
Package Size: 101X51X15cm

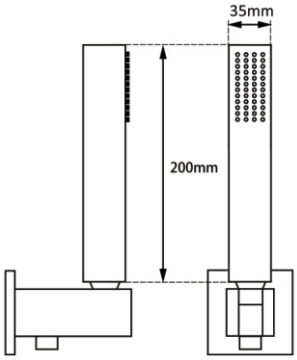

Please contact our sales team for the optional shower head/handheld shower price.

CH2127.SH.N+CH-S5.HHS
OX2127.SH.N+OX-S5.HHS
BUYG2127.SH
Shower Bracket + Handheld Shower

Top Water Inlet
Finish: Chrome/Matte Black/Brushed Yellow Gold
Main Material: Brass & SS304
Weight: 1.0kg
Package Size: 27X14.5X7.5cm

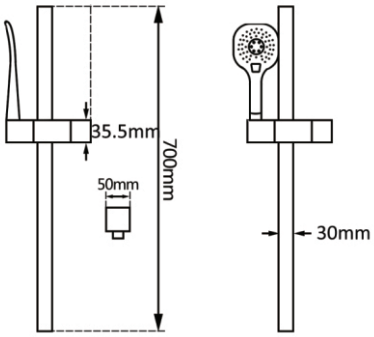

Please contact our sales team for the optional shower head/handheld shower price.

CH2145.SH.N+CH-S8.HHS
OX2145.SH.N+OX-S8.HHS
Shower Rail+ Handheld Shower

3 Functions Hand Shower
Finish: Chrome/Matte Black
Main Material: Brass & SS304
Weight: 3.0kg
Package Size: 75X15.5X9.5cm

50mm Wide rail

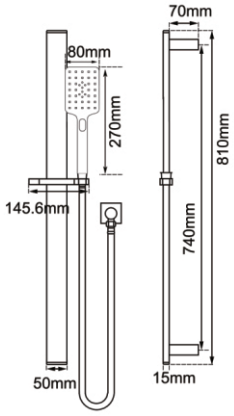

Please contact our sales team for the optional shower head/handheld shower price.

CH2149.SH.N+CH-S8.HHS
OX2149.SH.N+OX-S8.HHS
Shower Rail+ Handheld Shower

3 Functions Hand Shower
Finish: Chrome/Matte Black
Main Material: Brass & SS304
Weight: 3.0kg
Package Size: 75X15.5X9.5cm

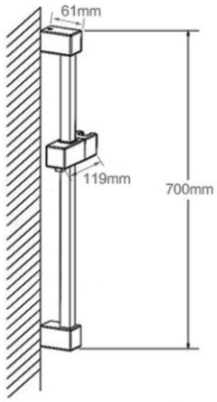

Please contact our sales team for the optional shower head/handheld shower price.

CH2137.SH.N+CH-S5.HHS
BU2137.SH.N+BU-S5.HHS
Shower Rail+ Handheld Shower

3 Functions Hand Shower
Finish: Chrome/Brushed Nickel
Main Material: Brass & SS304
Weight: 3.5kg
Package Size: 101X51X15cm

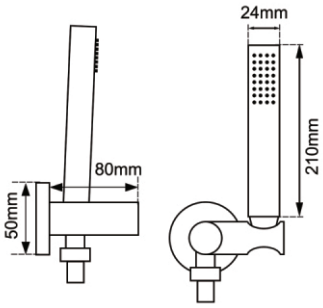

Please contact our sales team for the optional shower head/handheld shower price.

CH2131.SH.N+CH-R2.HHS
OX2131.SH.N+OX-R2.HHS
BU2131.SH / BUYG2131.SH / GM2131.SH
Shower Bracket + Handheld Shower

Finish: Chrome/Matte Black/Brushed Nickel/
Brushed Yewllow Gold/Gun Metal Grey
Main Material: Brass
Weight: 1.0kg
Package Size: 20.5X16.5X8.5cm

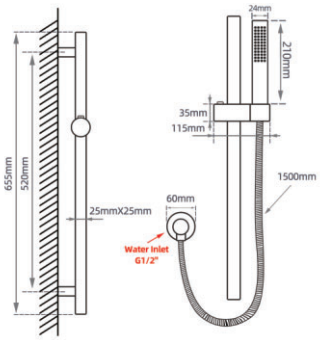

Please contact our sales team for the optional shower head/handheld shower price.

CH2147-1.SH.N+CH-R2.HHS
BU2147-1.SH / BUYG2147-1.SH / GM2147-1.SH
Shower Rail+ Handheld Shower

Finish: Chrome/Brushed Nickel/Brushed Yellow Gold/
Gun Metal Grey
Main Material: Brass & ABS
Weight: 0.7kg
Package Size: 69.5X23X6cm

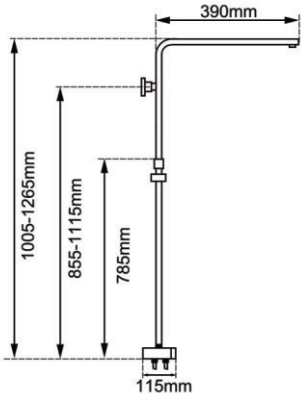

CH2125.SH.N/OX2125.SH.N

Universal Water Inlet
Finish: Chrome/Matte Black
Main Material: Brass & SS304
Weight: 3.5kg
Package Size: 101X51X15cm

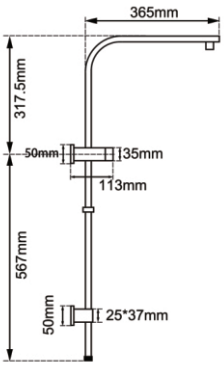

CH2130.SH.N/OX2130.SH.N
BU2130.SH.N/GM2130.SH.N

Top Water Inlet
Finish: Chrome/Matte Black/
Brushed Nickel/Gun Metal Grey
Main Material: Brass & SS304
Weight: 3.2kg
Package Size: 72X51X11cm

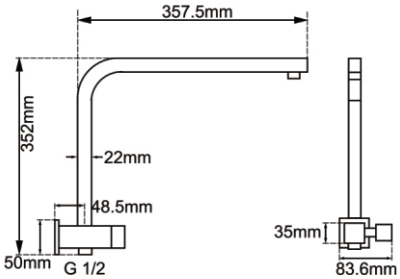

CH2140.SH.N/OX2140.SH.N

Top Water Inlet
Finish: Chrome/Matte Black
Main Material: Brass & SS304
Weight: 2.1kg
Package Size: 41.5X34.5X9cm

50mm Wide rail

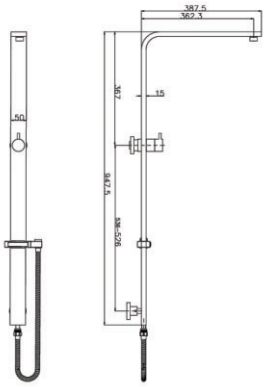

CH2150.SH.N/OX2150.SH.N

Top Water Inlet
Finish: Chrome/Matte Black
Main Material: Brass
Weight: 4.0kg
Package Size: 27X14.5X7.5cm

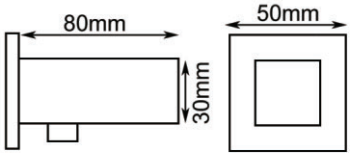

CH2127.SH.N/OX2127.SH.N/
BU2127.SH.N/GM2127.SH.N

Finish: Chrome/Matte Black/
Brushed Nickel/Gun Metal Grey
Main Material: Brass & SS304
Weight: 0.8kg
Package Size: 27X14.5X7.5cm

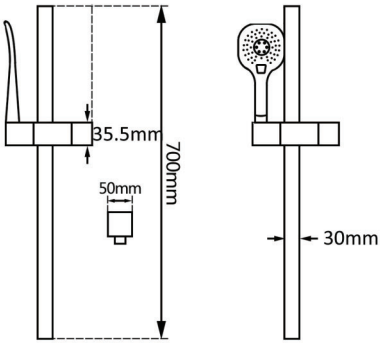

CH2145.SH.N/OX2145.SH.N

Top Water Inlet
Finish: Chrome/Matte Black
Main Material: Brass & Ss304
Weight: 2.5kg
Package Size: 75X15.5X9.5cm

50mm Wide rail

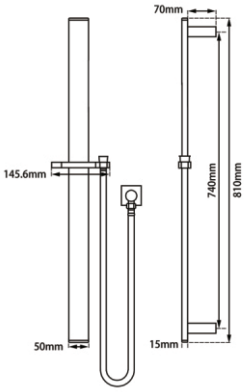

CH2149.SH.N/OX2149.SH.N
GM2149.SH.N

Wide Shower Rail
Finish: Chrome/Matte Black/Gun Metal Grey
Main Material: Brass & SS304
Weight: 2.5kg
Package Size: 75X15.5X9.5cm

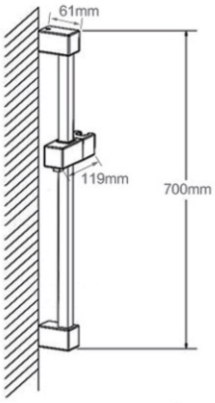

CH2137.SH.N/BU2137.SH.N

Finish: Chrome/Brushed Nickel
Main Material: Brass & SS304
Weight: 1.3kg
Package Size: 78X14X10cm

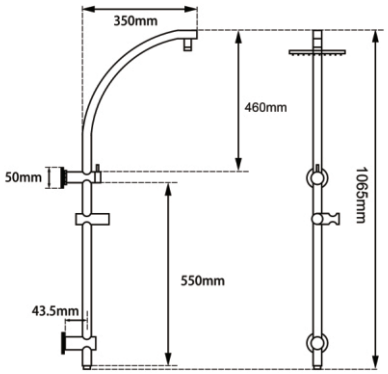

CH2128.SH.N/OX2128.SH.N

Top Water Inlet
Finish: Chrome/Matte Black
Main Material: Brass & SS304
Weight: 3.1kg
Package Size: 72X51X11cm

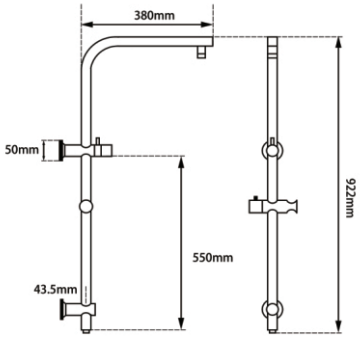

CH2128-A.SH.N/OX2128-A.SH.N

Top Water Inlet
Finish: Chrome/Matte Black
Main Material: Brass & Ss304
Weight: 3.1kg
Package Size: 72X51X11cm

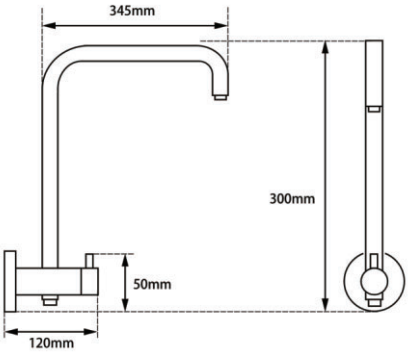

CH2138.SH.N/OX2138.SH.N

Top Water Inlet
Finish: Chrome/Matte Black
Main Material: Brass & SS304
Weight: 2.0kg
Package Size: 57X45.1X8.5cm

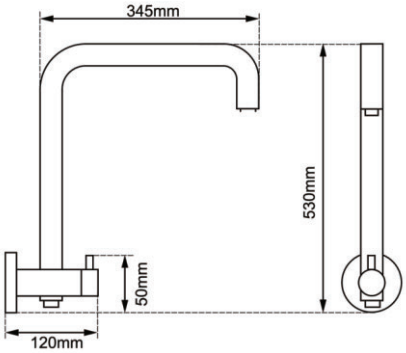

CH2138-L.SH.N

Top Water Inlet
Finish: Chrome
Main Material: Brass & SS304
Weight: 2.0kg
Package Size: 57X45.1X8.5cm

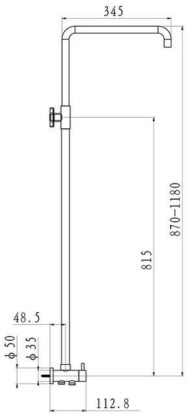

CH2152.SH.N/OX2152.SH.N

Universal Water Inlet
Finish: Chrome/Matte Black
Main Material: Brass & SS304
Weight: 3.5kg
Package Size: 101X51X15cm

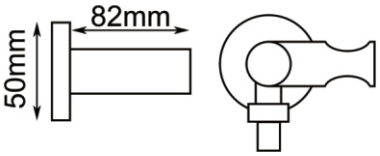

CH2131.SH.N/OX2131.SH.N

Finish: Chrome/Matte Black
Main Material: Brass
Weight: 0.6kg
Package Size: 20.5X16.5X8.5m

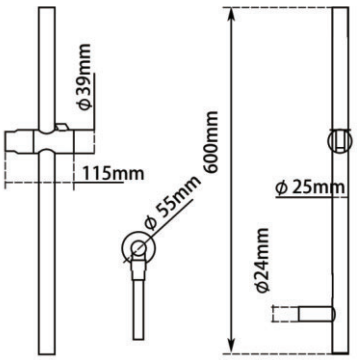

CH2147-1.SH.N

Finish: Chrome
Main Material: Brass & ABS
Weight: 0.6kg
Package Size: 69.5X23X6cm

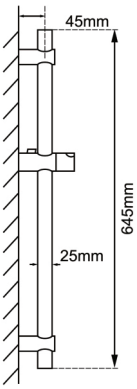

OX2146.SH.N

Finish: Matte Black
Main Material: Brass & ABS
Weight: 0.6kg
Package Size: 66.5X13X6cm

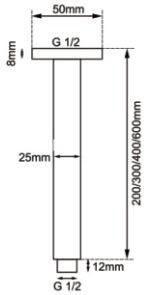

Square Ceiling Shower Arm

CH0103.SA/OX0103.SA/CH0126.SA/OX0126.SA
CH0117.SA/OX0117.SA/CH0106.SA/OX0106.SA
GM0126.SA/GM0106.SA/BU0103.SA/BU0126.SA
BU0117.SA/BU0106.SA

Finish: Chrome/Matte Black/Gun Metal Grey/
Brushed Nickel
Material: Brass
Weight: 0.25/0.4/0.55kg
Package Size: 20/30/40/60cm

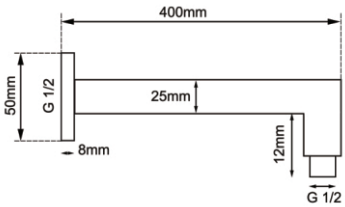

Straight Wall Shower Arm

CH0104.SA/OX0104.SA

Finish: Chrome/Matte Black
Material: Brass
Weight: 0.45kg
Package Size: 44X8X5cm

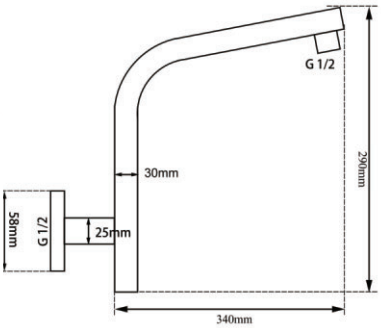

Gooseneck Wall Shower Arm

CH0129.SA/OX0129.SA/GM0129.SA

Finish: Chrome/Matte Black/Gun Metal Grey
Material: SS304
Weight: 0.45kg
Package Size: 48X18X4cm

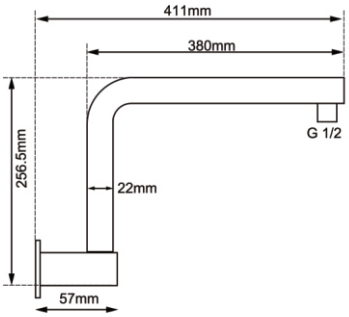

Swivel Wall Shower Arm

BU1000.SA

Finish: Brushed Nickel
Material: Brass
Weight: 0.8kg
Package Size: 52.5X29.5X4.5cm

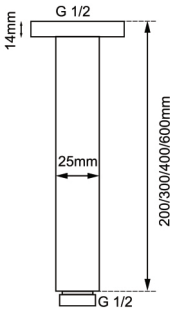

Round Ceiling Shower Arm

CH0105.SA/OX0105.SA/CH0125.SA/OX0125.SA/ CH0120.SA/OX0120.SA/GM0120.SABUYG0120.SA/ CH0121.SA/OX0121.SA

Finish: Chrome/Matte Black/Gun Metal Grey/ Brushed Yellow Gold
Material: SS304
Weight: 0.3/0.5kg
Package Size: 20/30/40/60cm

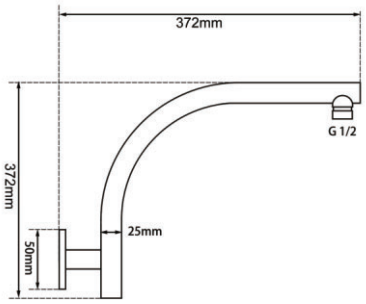

Swivel Wall Shower Arm

CH0128.SA/OX0128.SA

Finish: Chrome/Matte Black
Material: Brass
Weight: 0.8kg
Package Size: 52X30X4cm

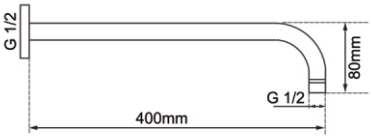

Straight Wall Shower Arm

CH0108.SA/OX0108.SA

Finish: Chrome/Matte Black
Material: Brass
Weight: 0.6kg
Package Size: 46X25X4cm

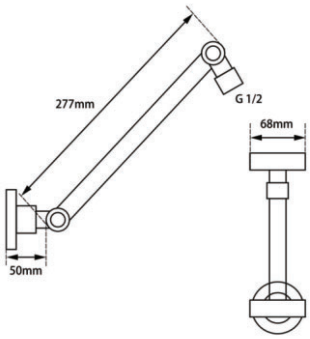

Swivel Wall Shower Arm

CH0109.SA

Finish: Chrome
Material: Brass
Weight: 0.6kg
Package Size: 46X25X4cm

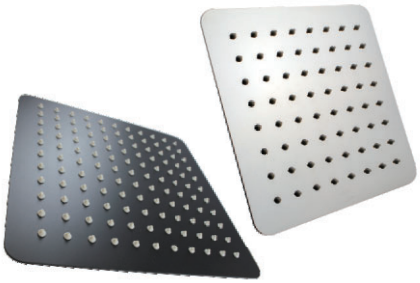

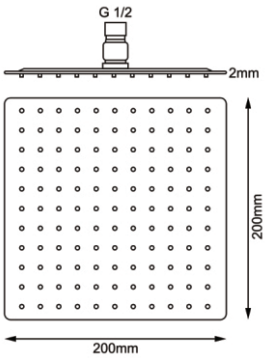

CH0100.SH/OX0100.SH/RG0100.SH

Finish: Chrome/Matte Black/Rose Gold
Material: SS304
Weight: 0.85kg
Package Size: 22X22X7cm

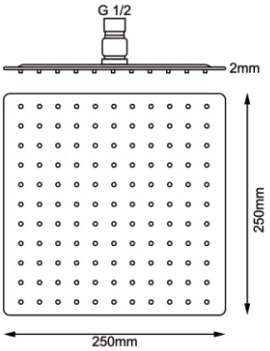

CH0002.SH/OX0002.SH/BU0002.SH

Finish: Chrome/Matte Black/Brushed Nickel
Material: SS304
Weight: 1.2kg
Package Size: 28X28X7cm

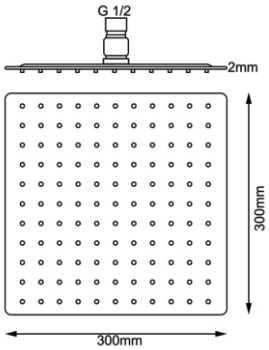

CH0003.SH/OX0003.SH

Finish: Chrome/Matte Black
Material: SS304
Weight: 1.9kg
Package Size: 32X32X7cm

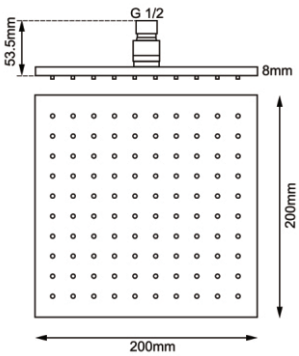

CH0134.SH/OX0134.SH

Finish: Chrome/Matte Black
Material: Brass
Weight: 1.5kg
Package Size: 20X20X8.5cm

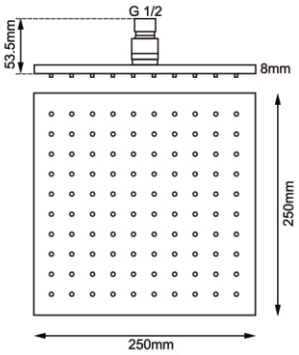

CH0135.SH/OX0135.SH/GM0135.SH

Finish: Chrome/Matte Black/Gun Metal Grey
Material: Brass
Weight: 2.0kg
Package Size: 25X25X8.5cm

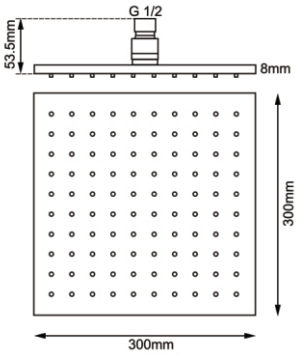

CH0133.SH/OX0133.SH

Finish: Chrome/Matte Black
Material: Brass
Weight: 3.0kg
Package Size: 33X33X7.5cm

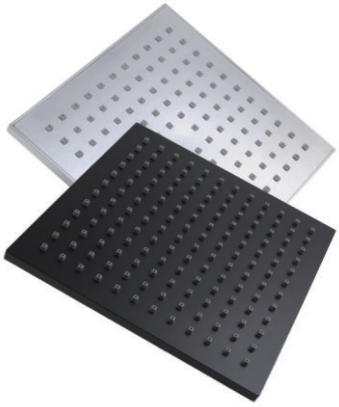

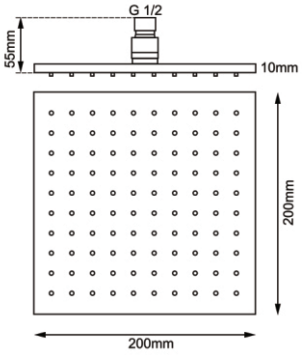

CH0115.SH/OX0115.SH

Finish: Chrome/Matte Black
Material: ABS
Weight: 0.45kg
Package Size: 21X21X7cm

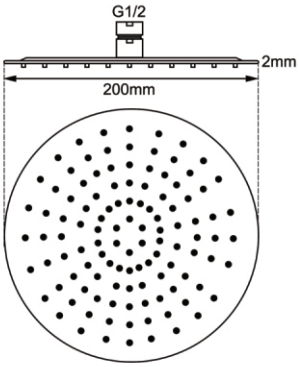

CH0119.SH/OX0119.SH

Finish: Chrome/Matte Black
Material: SS304
Weight: 0.8kg
Package Size: 20X20X8.5cm

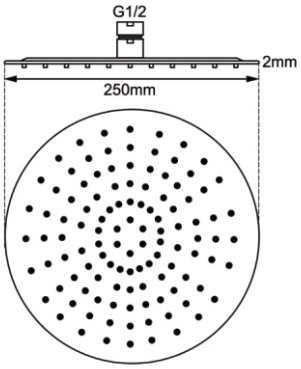

CH0007.SH/OX0007.SH

Finish: Chrome/Matte Black
Material: SS304
Weight: 1.05kg
Package Size: 27X27X7cm

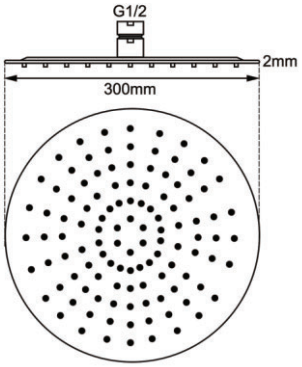

CH0008.SH/OX0008.SH

Finish: Chrome/Matte Black
Material: SS304
Weight: 1.9kg
Package Size: 32X32X7cm

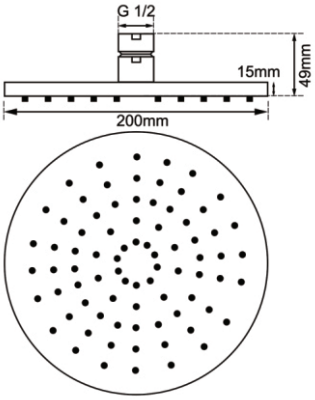

CH0102.SH

Finish: Chrome
Material: ABS
Weight: 0.4kg
Package Size: 22X22X7.5cm

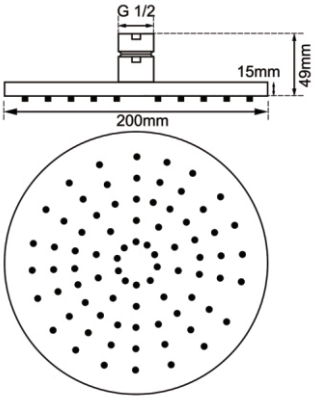

OX0102.SH

Finish: Matte Black
Material: ABS
Weight: 0.4kg
Package Size: 22X22X7.5cm

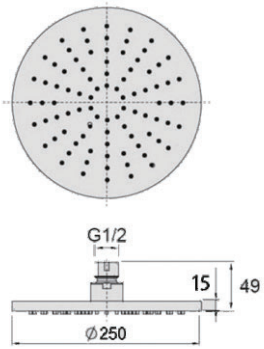

BUYG0010.SH

Finish: Brushed Yellow Gold
Material: Solid Brass
Weight: 1.0kg
Package Size: 26X26X10cm

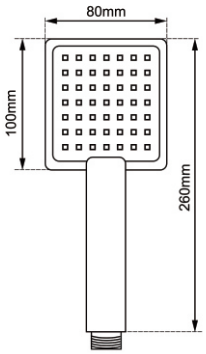

CH-S2.HHS/OX-S2.HHS

Square Hand Shower
Finish: Chrome/Matte Black
Material:ABS
Weight: 0.2kg
Package Size: 28X12X10cm

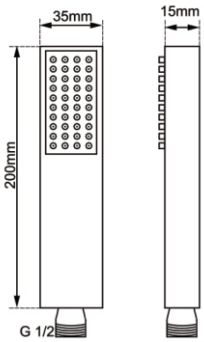

CH-S5.HHS/OX-S5.HHS/
BU-S5.HHS/GM-S5.HHS

Square Hand Shower
Finish: Chrome/Matte Black/
Brushed Nickel/Gun Metal Grey
Material:Brass
Weight: 0.8kg
Package Size: 22X5X5cm

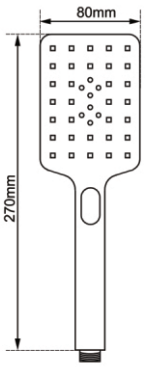

CH-S8.HHS/OX-S8.HHS/
BU-S8.HHS/GM-S8.HHS

3 Functions Hand Shower
Finish: Chrome/Matte Black/
Brushed Nickel/Gun Metal Grey
Material:ABS
Weight: 1.0kg
Package Size: 28X9X5cm

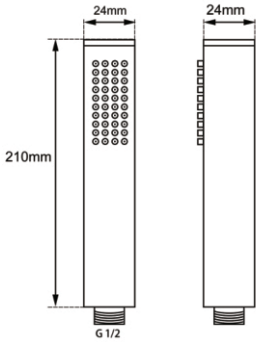

CH-R2.HHS/OX-R2.HHS

Round Hand Shower
Finish: Chrome/Matte Black
Material:Brass
Weight: 0.8kg
Package Size: 22X3X3cm

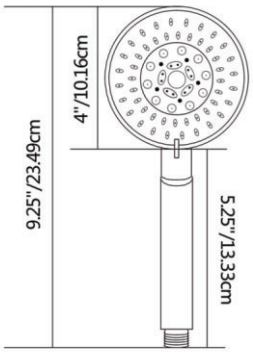

CH-R4.HHS/OX-R4.HHS

5 Functions Hand Shower
Finish: Chrome/Matte Black
Material:ABS
Weight: 0.2kg
Package Size: 25X12X5.5cm

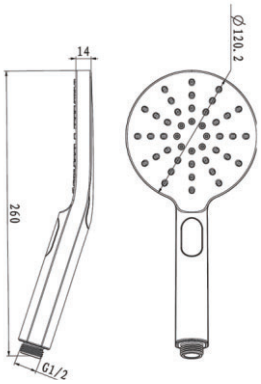

CH-R11.HHS/OX-R11.HHS/
BU-R11.HHS/GM-R11.HHS

3 Functions Hand Shower
Finish: Chrome/Matte Black/
Brushed Nickel/Gun Metal Grey
Material:ABS
Weight: 0.8kg
Package Size: 22X3X3cm

PVC/PVCB

PVC Shower Hose
Finish: Chrome/Matte Black
Material:PVC
Weight: 0.1kg
Size: 150cm

PVCBU/PVCGM

PVC Shower Hose
Finish: Brushed Nickel/Gun Metal Grey
Material:PVC
Weight: 0.1kg
Size: 150cm

H150/SH150-B

Flexible Shower Hose
Finish: Chrome/Matte Black
Material:SS304
Weight: 0.1kg
Size: 150cm

SH150BU/SH150GM/SH150-BUYG

Flexible Shower Hose
Finish: Brushed Nickel/Gun Metal Grey/
Brushed Yellow Gold
Material:SS304
Weight: 0.1kg
Size: 150cm

CH1500-2125.SH/OX1500-2125.SH

Water Inlet/Outlet Shower Hose
Finish: Chrome/Matte Black
Material:SS304
Weight: 0.1kg
Size: 150cm

03

Heated
Tower Rail

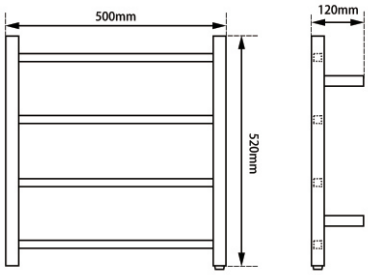

Square Heated Towel Rail 4 Bars(Exposed/ Concealed Power Cord)

CH04.S.HTR/OX04.S.HTR/ BUGM04.R.HTR/BUYG04.R.HTR

Top/Bottom/Left/Right Plug
Finish: Chrome/Matte Black/Brushed Gun Metal Grey/Brushed Yellow Gold
Main Material: SS304
Weight: 3.0kg
Package Size: 56X54X10cm

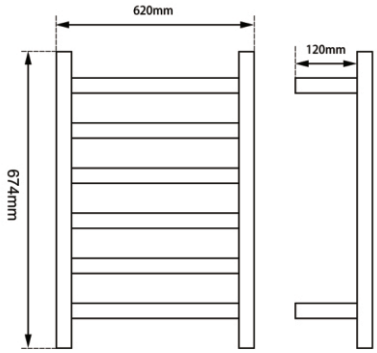

Square Heated Towel Rail 6 Bars(Exposed/ Concealed Power Cord)

CH06.S.HTR/OX06.S.HTR/BU06.S.HTR BUGM06.S.HTR/BUYG06.S.HTR

Top/Bottom/Left/Right Plug
Finish: Chrome/Matte Black/Brushed Nickel/ Brushed Gun Metal Grey/Brushed Yellow Gold
Main Material: SS304
Weight: 4.5kg
Package Size: 66X71X10cm

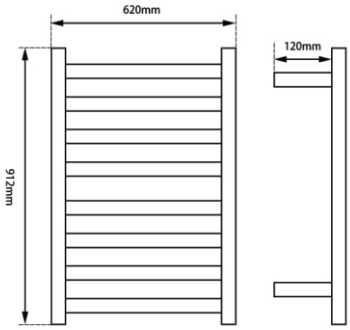

Square Heated Towel Rail 8 Bars(Exposed/ Concealed Power Cord)

CH08.S.HTR/OX08.S.HTR

Top/Bottom/Left/Right Plug
Finish: Chrome/Matte Black
Main Material: SS304
Weight: 5.4kg
Package Size: 95X65X7.5cm

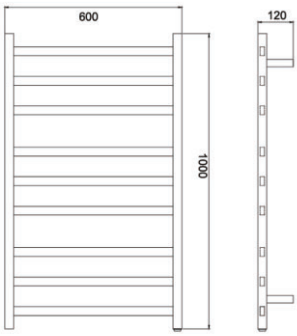

Square Heated Towel Rail 9 Bars(Exposed/ Concealed Power Cord)

CH09.S.HTR/OX09.S.HTR

Top/Bottom/Left/Right Plug
Finish: Chrome/Matte Black
Main Material: SS304
Weight: 5.8kg
Package Size: 95X65X7.5cm

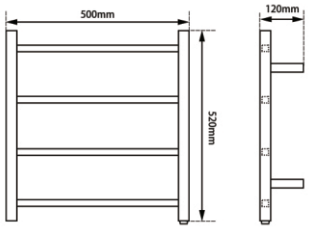

Square Heated Towel Rail 4 Bars(Exposed/ Concealed Power Cord)

CH04.R.HTR/OX04.R.HTR/ BUGM04.R.HTR/BUYG04.R.HTR

Top/Bottom/Left/Right Plug
Finish: Chrome/Matte Black/Brushed Gun/ Metal Grey/Brushed Yellow Gold
Main Material: SS304
Weight: 4.0kg
Package Size: 56X54X10cm

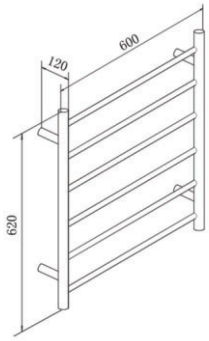

Square Heated Towel Rail 6 Bars(Exposed/ Concealed Power Cord)

CH06.R.HTR/OX06.R.HTR/BU06.R.H TRBUGM06.R.HTR/BUYG06.R.HTR

Top/Bottom/Left/Right Plug
Finish: Chrome/Matte Black/Brushed Nickel/ Brushed Gun Metal Grey/Brushed Yellow Gold
Main Material: SS304
Weight: 4.5kg
Package Size: 70.5X64X7.5cm

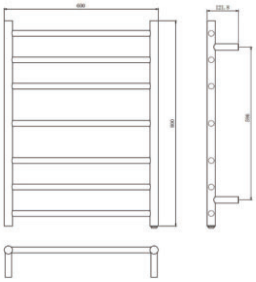

Square Heated Towel Rail 7 Bars(Exposed/ Concealed Power Cord)

CH07.R.HTR/OX07.R.HTR

Top/Bottom/Left/Right Plug
Finish: Chrome/Matte Black
Main Material: SS304
Weight: 6kg
Package Size: 85X64X9cm

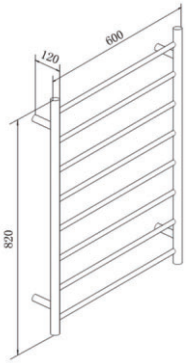

Square Heated Towel Rail 8 Bars(Exposed/ Concealed Power Cord)

CH08.R.HTR/OX08.R.HTR

Top/Bottom/Left/Right Plug
Finish: Chrome/Matte Black
Main Material: SS304
Weight: 5.5kg
Package Size: 95X65X7.5cm

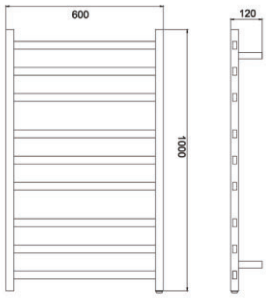

Square Heated Towel Rail 9 Bars(Exposed/ Concealed Power Cord)

OX09.R.HTR

Top/Bottom/Left/Right Plug
Finish: Matte Black
Main Material: SS304
Weight: 6kg
Package Size: 100X60X12cm

04

Hardware
Pendant & Hook

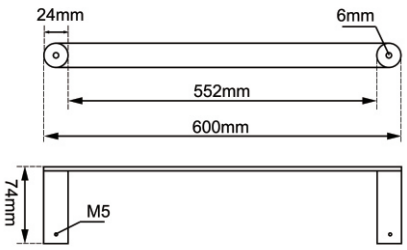

SingleTowel Rail 600mm

CH6501.TR/OX6501.TR/GM6501.TR/ BU6501.TR/BUYG6501.TR

Finish: Chrome/Matte Black/Gunmetal Grey/Brushed Nickel/Brushed Yellow Gold
Material: SS304
Weight: 1.0kg
Package Size: 62X10X5cm

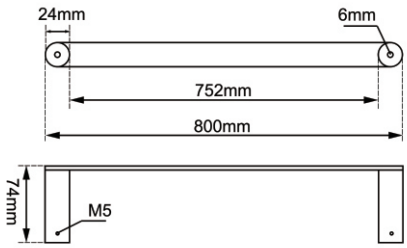

SingleTowel Rail 800mm

CH6501.8.TR/OX6501.8.TR/ GM6501.8.TR/BU6501.8.TR

Finish: Chrome/Matte Black/Gunmetal Grey/ Brushed Nickel
Material: SS304
Weight: 1.0kg
Package Size: 82X10X5cm

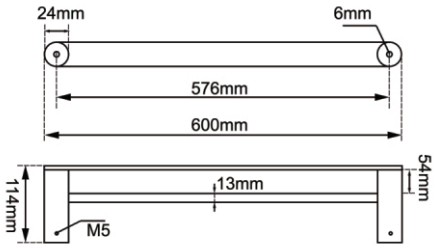

DoubleTowel Rail 600mm

CH6502.TR/OX6502.TR/GM6502.TR/ BU6502.TR/BUYG6502.TR

Finish: Chrome/Matte Black/Gunmetal Grey/Brushed Nickel/Brushed Yellow Gold
Material: SS304
Weight: 1.0kg
Package Size: 64X14X6cm

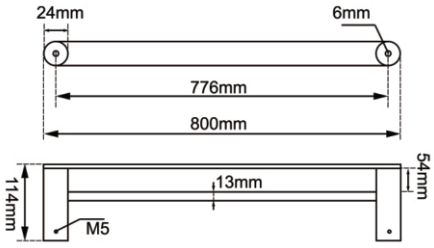

DoubleTowel Rail 800mm

CH6502.8.TR/OX6502.8.TR/GM6502.8.TR/ BU6502.8.TR/BUYG6502.8.TR

Finish: Chrome/Matte Black/Gunmetal Grey/Brushed Nickel/Brushed Yellow Gold
Material: SS304
Weight: 1.15kg
Package Size: 84X14X6cm

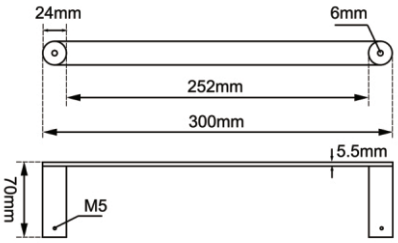

Hand Towel Ring 300mm

CH6503.TR/OX6503.TR/GM6503.TR/ BU6503.TR/BUYG6503.TR

Finish: Chrome/Matte Black/Gunmetal Grey/Brushed Nickel/Brushed Yellow Gold
Material: SS304
Weight: 0.55kg
Package Size: 33X8.5X6cm

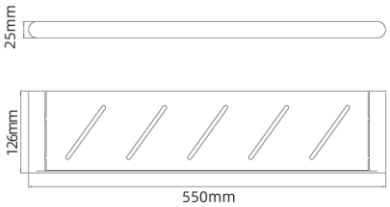

Stainless Steel Shelf

CH6514.TR/OX6514.TR/ GM6514.TR/BU6514.TR

Finish: Chrome/Matte Black/Gunmetal Grey/ Brushed Nickel
Material: SS304
Weight: 0.5kg
Package Size: 56X14X3.5cm

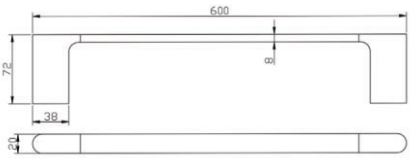

SingleTowel Rail 600mm

CH8001.TR/OX8001.TR/BU8001.TR/ GM8001.TR/BUYG8001.TR

Finish: Chrome/Matte Black/Brushed Nickel/ Gun Metal Grey/Brushed Yellow Gold
Material: Zinc-alloy+Brass
Weight: 0.5kg
Package Size: 62X10X5cm

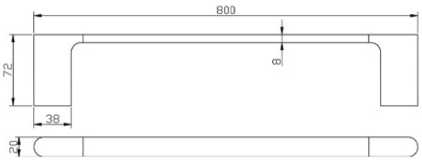

SingleTowel Rail 800mm

CH8001.8.TR/OX8001.8.TR/BU8001.8.TR/ GM8001.8.TR/BUYG8001.8.TR

Finish: Chrome/Matte Black/Brushed Nickel/ Gun Metal Grey/Brushed Yellow Gold
Material: Zinc-alloy+Brass
Weight: 1.0kg
Package Size: 82X10X5cm

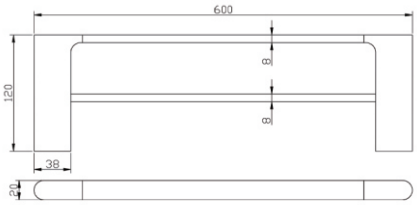

Double Towel Rail 600mm

CH8002.TR/OX8002.TR/BU8002.TR/ BUYG8002.TR/GM8002.TR

Finish: Chrome/Matte Black/Brushed Nickel/ Brushed Yellow Gold/Gun Metal Grey
Material: Zinc-alloy+Brass
Weight: 0.5kg
Package Size: 62X15X5cm

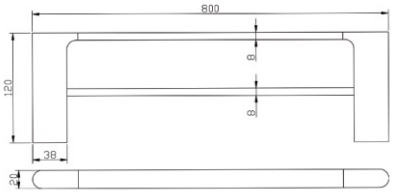

Double Towel Rail 800mm

CH8002.8.TR/OX8002.8.TR/BU8002.8.TR/ BUYG8002.8.TR/GM8002.8.TR

Finish: Chrome/Matte Black/Brushed Nickel/ Brushed Yellow Gold/Gun Metal Grey
Material: Zinc-alloy+Brass
Weight: 1.5kg
Package Size: 82X15X6cm

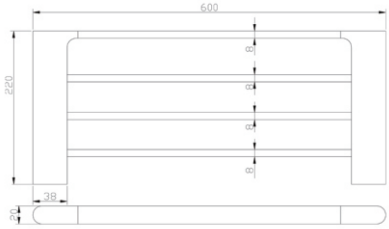

Towel Holder 600mm

CH8009.TR/OX8009.TR

Finish: Chrome/Matte Black
Material: Zinc-alloy+Brass
Weight: 2.0kg
Package Size: 70X30X5cm

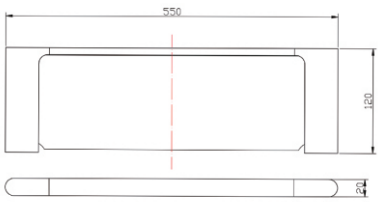

Glass Shelf 550mm

CH8014.TR/OX8014.TR

Finish: Chrome/Matte Black
Material: Zinc-alloy+Brass
Weight: 2.0kg
Package Size: 62X20X5cm

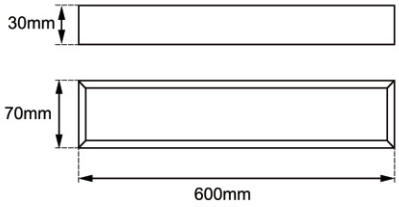

Single Towel Rail 600mm

CH6401.TR/OX6401.TR

Finish: Chrome/Matte Black
Material: SS304
Weight: 0.6kg
Package Size: 64X9.5X6cm

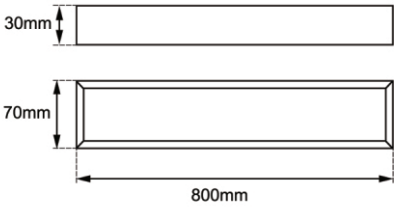

Single Towel Rail 800mm

CH6401.8.TR/OX6401.8.TR

Finish: Chrome/Matte Black
Material: SS304
Weight: 0.8kg
Package Size: 82X9X9cm

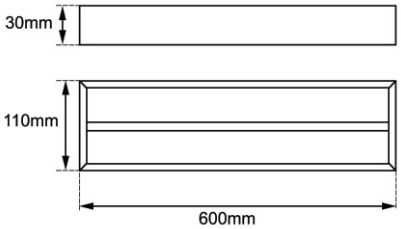

Double Towel Rail 600mm

CH6402.TR/OX6402.TR

Finish: Chrome/Matte Black
Material: SS304
Weight: 1.05kg
Package Size: 65X14X6cm

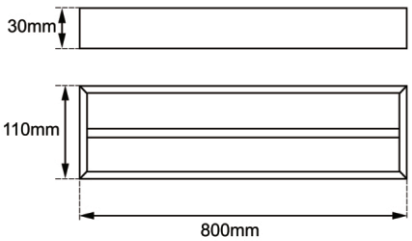

Double Towel Rail 800mm

CH6402.8.TR/OX6402.8.TR

Finish: Chrome/Matte Black
Material: SS304
Weight: 1.45kg
Package Size: 82X14X5.5cm

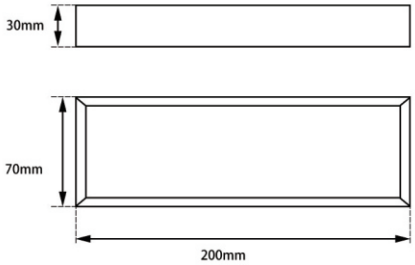

Hand Towel Ring 200mm

CH6403.TR/OX6403.TR

Finish: Chrome/Matte Black
Material: SS304
Weight: 0.3kg
Package Size: 29.5X9.5X7.5cm

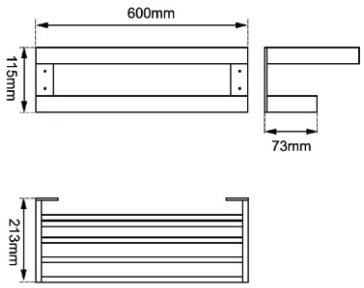

Towel Bar 600mm

CH6409.TR/OX6409.TR

Finish: Chrome/Matte Black
Material: SS304
Weight: 1.95kg
Package Size: 62.5X25X13cm

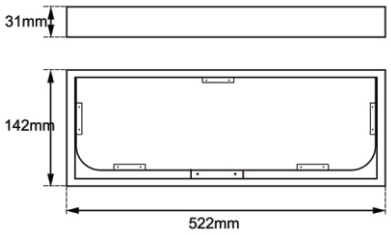

Glass Holder

CH6414.TR/OX6414.TR

Finish: Chrome/Matte Black
Material: SS304&Glass
Weight: 2.4kg
Package Size: 64X16X6cm

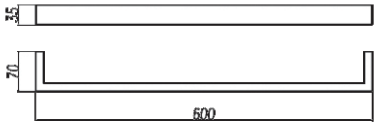

Single Towel Rail 600mm

CH7001.TR/OX7001.TR/BU7001.TR/ GM7001.TR/BUYG7001.TR

Finish: Chrome/Matte Black/Brushed Nickel/ Gun Metal Grey/Brushed Yellow Gold
Material: SS304
Weight: 0.8kg
Package Size: 62X10X5cm

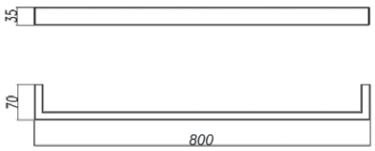

Single Towel Rail 800mm

CH7001.8.TR/OXCH7001.8.TR/BU7001.8.TR/ GM7001.8.TR/BUYG7001.8.TR

Finish: Chrome/Matte Black/Brushed Nickel/ Gun Metal Grey/Brushed Yellow Gold
Material: SS304
Weight: 1.0kg
Package Size: 82X10X5cm

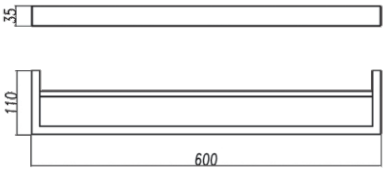

Double Towel Rail 600mm

CH7002.TR/OX7002.TR/BU7002.TR/ GM7002.TR/BUYG7002.TR

inish: Chrome/Matte Black/Brushed Nickel/ Gun Metal Grey/Brushed Yellow Gold
Material: SS304
Weight: 1.2kg
Package Size: 64X14X5cm

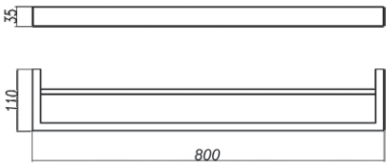

Double Towel Rail 800mm

CH7002.TR/OX7002.TR/BU7002.TR/ GM7002.TR/BUYG7002.TR

inish: Chrome/Matte Black/Brushed Nickel/ Gun Metal Grey/Brushed Yellow Gold
Material: SS304
Weight: 1.4kg
Package Size: 82X14X5cm

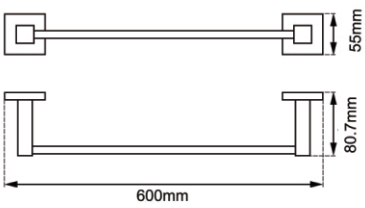

Single Towel Rail 600mm

CH6301.TR/OX6301.TR

Finish: Chrome/Matte Black
Material: SS304
Weight: 0.7kg
Package Size: 60X8X5.5cm

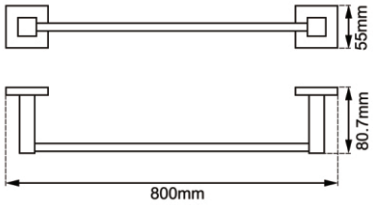

Single Towel Rail 800mm

CH6301.8.TR/OX6301.8.TR

Finish: Chrome/Matte Black
Material: SS304
Weight: 0.7kg
Package Size: 81X8X5.5cm

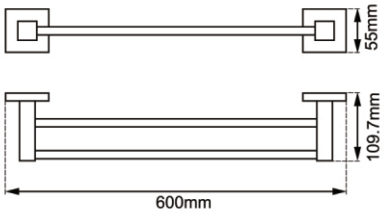

Double Towel Rail 600mm

CH6302.TR/OX6302.TR

Finish: Chrome/Matte Black
Material: SS304
Weight: 1.0kg
Package Size: 60X11X5.5cm

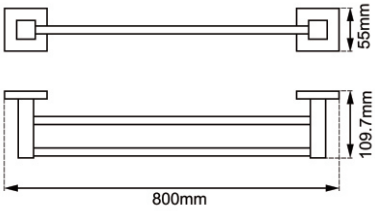

Double Towel Rail 800mm

CH6302.8.TR/OX6302.8.TR

Finish: Chrome/Matte Black
Material: SS304
Weight: 1.0kg
Package Size: 81X11X5.5cm

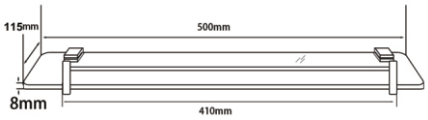

Glass Shelf 500mm

CH6314.TR/OX6314.TR

Finish: Chrome/Matte Black
Material: Glass
Weight: 1.0kg
Package Size: 52X14X5cm

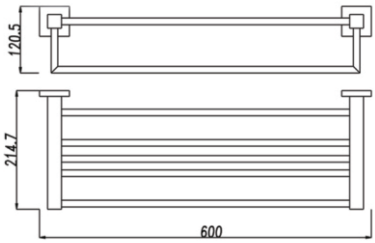

Towel Holder 600mm

CH6309.TR/OX6309.TR

Finish: Chrome/Matte Black
Material: SS304
Weight: 1.5kg
Package Size: 62X23X14cm

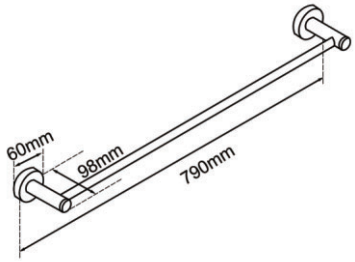

Single Towel Rail 790mm

CH6601.TR/OX6601.TR/BUYG6901.TR

Finish: Chrome/Matte Black/Brushed Yellow Gold
Material: SS304
Weight: 0.45kg
Package Size: 81X12X6.5cm

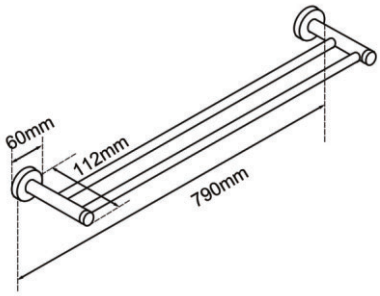

Double Towel Rail 790mm

CH6602.TR/OX6602.TR/GM6602.TR/ BUYG6602.TR

Finish: Chrome/Matte Black/GunmetalGrey/ Brushed Yellow Gold
Material: SS304
Weight: 0.45kg
Package Size: 81X12X6.5cm

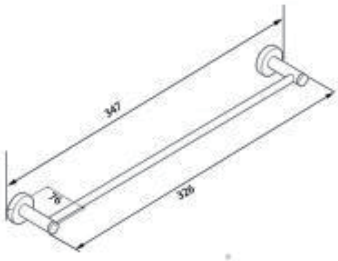

Towel Rail

BU6610.TR/GM6610.TR/BUYG6610.TR

Finish: Brushed Nickel/Gunmetal Grey/ Brushed Yellow Gold
Material: SS304
Weight: 0.3kg
Package Size: 22X5X5cm

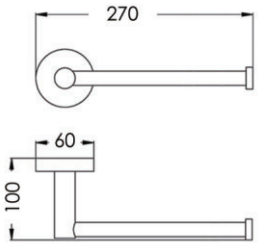

Towel Hook Ring

CH6615.TR/OX6615.TR

Finish: Chrome/Matte Black
Material: SS304
Weight: 0.45kg
Package Size: 30X12X6.5cm

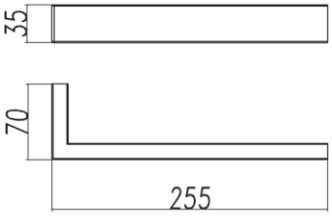

Towel Rail

CH7003.TR/OX7003.TR/BU7003.TR/ GM7003.TR/BUYG7003.TR

Finish: Chrome/Matte Black/Brushed Nickel/ Gun Metal Grey/Brushed Yellow Gold
Material: SS304
Weight: 0.5kg
Package Size: 28X10X5cm

Hand Towel Ring 235mm

CH8003.TR/OX8003.TR/BU8003.TR/ GM8003.TR/BUYG8003.TR

Finish: Chrome/Matte Black/Brushed Nickel/ Gun Metal Grey/Brushed Yellow Gold
Material: Zinc-alloy+Brass
Weight: 0.3kg
Package Size: 33X8.5X6cm

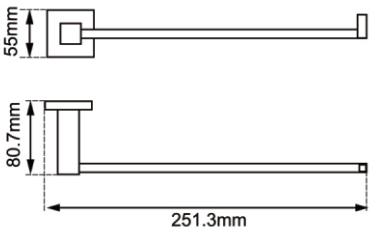

Hand Towel Hook

CH6303.TR/OX6303.TR

Finish: Chrome/Matte Black
Material: SS304
Weight: 0.4kg
Package Size: 26X7X5.5cm

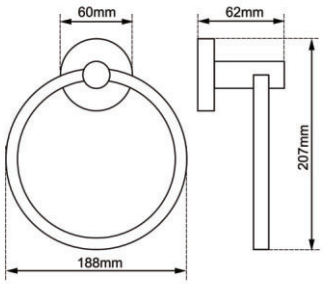

Hand Towel Ring

CH6603.TR/OX6603.TR

Finish: Chrome/Matte Black
Material: SS304
Weight: 0.3kg
Package Size: 18X18X6cm

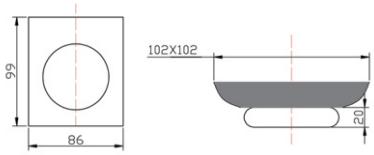

Soap Dish

CH8006.TR/OX8006.TR

Finish: Chrome/Matte Black
Material: Zinc-alloy+Brass
Weight: 0.3kg
Package Size: 22X5X5cm

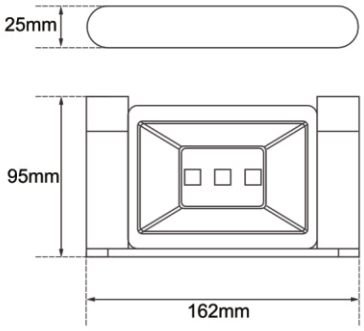

Soap Dish

**CH6506.TR/OX6506.TR/
GM6506.TR/BU6506.TR**

Finish: Chrome/Matte Black/Gunmetal Grey/
Brushed Nickel
Material: SS304
Weight: 0.3kg
Package Size: 22X5X5cm

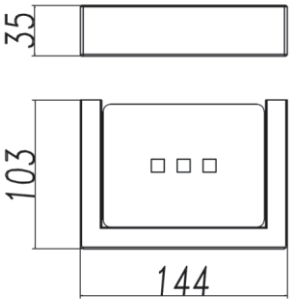

Soap Dish

**CH7006.TR/OX7006.TR/BU7006.TR/
GM7006.TR/BUYG7006.TR**

Finish: Chrome/Matte Black/Brushed Nickel/ Gun Metal
Grey/Brushed Yellow Gold
Material: SS304
Weight: 0.4kg
Package Size: 17X13X6cm

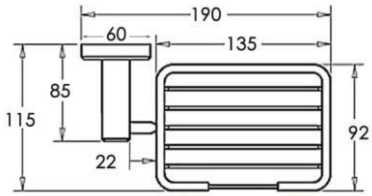

Soap Holder

CH6606.TR

Finish: Chrome
Material: SS304
Weight: 0.45kg
Package Size: 20X10X6.5cm

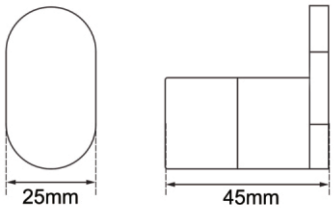

Robe Hook

CH6507.TR/OX6507.TR/GM6507.TR/ BU6507.TR/BUYG6507.TR

Finish: Chrome/Matte Black/Gunmetal Grey/Brushed Nickel/Brushed Yellow Gold
Material: SS304
Weight: 0.3kg
Package Size: 22X5X5cm

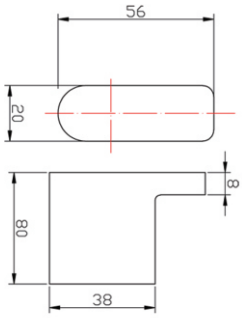

Robe Hook

CH8007.TR/OX8007.TR/BU8007.TR/ GM8007.TR/BUYG8007.TR

Finish: Chrome/Matte Black/Brushed Nickel/ Brushed Yellow Gold/Gun Metal Grey
Material: Zinc-alloy+Brass
Weight: 0.3kg
Package Size: 22X5X5cm

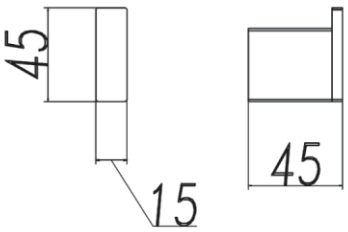

Robe Hook

CH7007.TR/OX7007.TR/BU7007.TR/ GM7007.TR/BUYG7007.TR

inish: Chrome/Matte Black/Brushed Nickel/ Gun Metal Grey/Brushed Yellow Gold
Material: SS304
Weight: 0.2kg
Package Size: 8X7X6.5cm

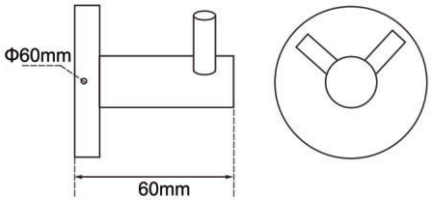

Robe Hook

CH6607.TR/OX6607.TR

Finish: Chrome/Matte Black
Material: SS304
Weight: 0.2kg
Package Size: 7X7X6cm

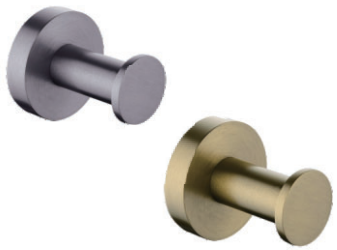

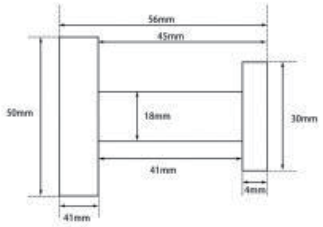

Robe Hook

GM6608.TR/BUYG6608.TR

Finish: Gun Metal Grey/Brushed Yellow Gold
Material: SS304
Weight: 0.1kg
Package Size: 8X9X6cm

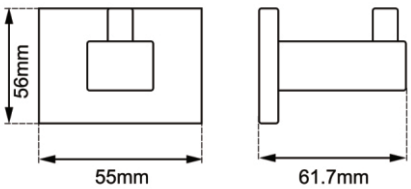

Robe Hook

CH6307.TR/OX6307.TR

Finish: Chrome/Matte Black
Material: SS304
Weight: 0.4kg
Package Size: 8X6.5X6.5cm

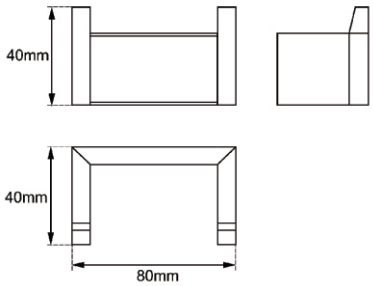

Robe Hook

CH64007.TR/OX6407.TR

Finish: Chrome/Matte Black
Material: SS304
Weight: 0.3kg
Package Size: 9X8X6.5cm

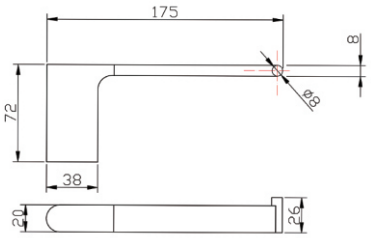

Toilet Paper Holder

CH8013.TR/OX8013.TR/BU8013.TR/ GM8013.TR/BUYG8013.TR

Finish: Chrome/Matte Black/Brushed Nickel/ Brushed Yellow Gold/Gun Metal Grey
Material: Zinc-alloy+Brass
Weight: 0.3kg
Package Size: 22X5X5cm

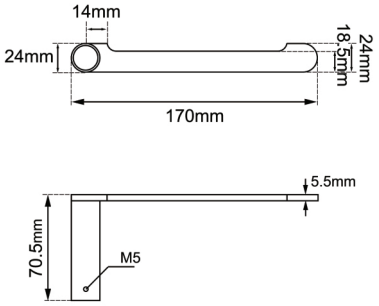

Paper Roll Holder

CH6513.TR/OX6513.TR/GM6513.TR/ BU6513.TR/BUYG6513.TR

Finish: Chrome/Matte Black/Gunmetal Grey/Brushed Nickel/Brushed Yellow Gold
Material: SS304
Weight: 0.3kg
Package Size: 22X5X5cm

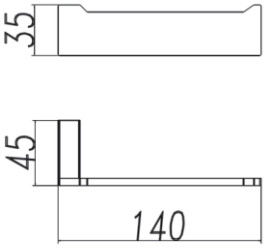

Toilet Paper Holder

CH7008.TR/OX7008.TR/BU7008.TR/ GM7008.TR/BUYG7008.TR

inish: Chrome/Matte Black/Brushed Nickel/ Gun Metal Grey/Brushed Yellow Gold
Material: SS304
Weight: 0.3kg
Package Size: 18X8X7cm

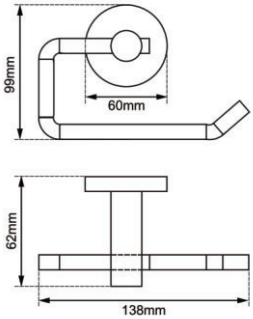

Toilet Paper Holder

CH6613.TR/OX6613.TR/BU6613.TR

Finish: Chrome/Matte Black/Brushed Nickel
Material: SS304
Weight: 0.3kg
Package Size: 18X18X6cm

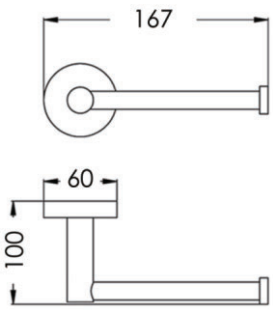

Toilet Paper Hook

CH6611.TR/OX6611.TR/BU6611.TR/ GM6611.TR/BUYG6611.TR

Finish: Chrome/Matte Black/Brushed Nickel/ Gun Metal Grey/Brushed Yellow Gold
Material: SS304
Weight: 0.45kg
Package Size: 17X12X6.5cm

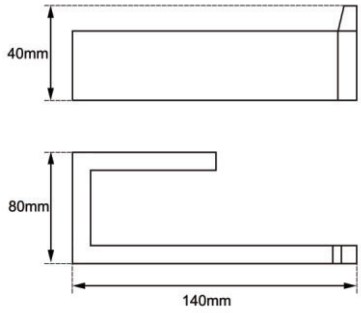

Toiet Roll Holder

CH6408.TR/OX6408.TR

Finish: Chrome/Matte Black
Material: SS304
Weight: 0.4kg
Package Size: 20.5X9.5X7cm

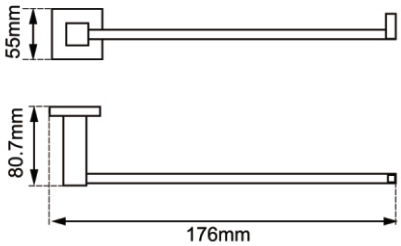

Paper Roll Holder

CH6313.TR/OX6313.TR

Finish: Chrome/Matte Black
Material: SS304
Weight: 0.3kg
Package Size: 18X4.3X9cm

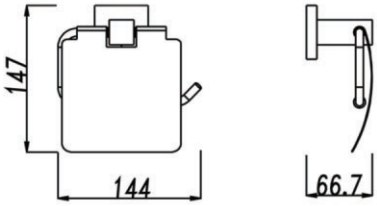

Paper Roll Holder

CH6308.TR

Finish: Chrome
Material: SS304
Weight: 0.49kg
Package Size: 18.5X6X8.5cm

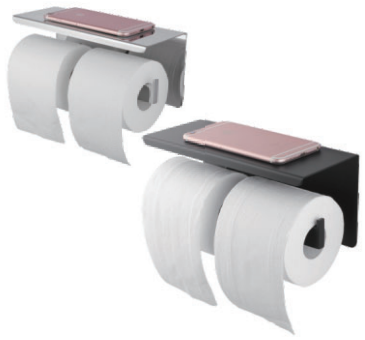

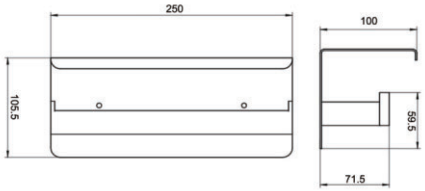

Paper Roll Holder

CH6114.TR/OX6114.TR

Finish: Chrome/Matte Black
Material: SS304
Weight: 0.8kg
Package Size: 26X17X11cm

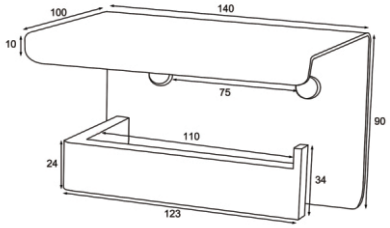

Paper Roll Holder

CH6115.TR/OX6115.TR

Finish: Chrome/Matte Black
Material: SS304
Weight: 0.5kg
Package Size: 16X12X11cm

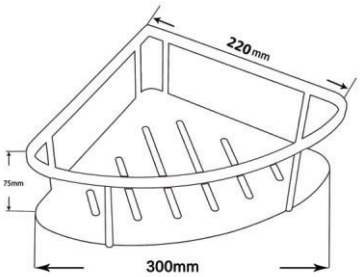

Corner Shelf

CH6116.TR/OX6116.TR

Finish: Chrome/Matte Black
Material: SS304
Weight: 0.9kg
Package Size: 25X25X8cm

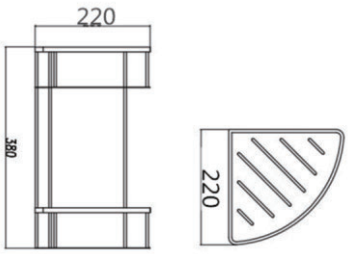

Corner Shelf

CH6117.TR/OX6117.TR

Finish: Chrome/Matte
Black Material: SS304
Weight: 2kg
Package Size:
40X25X25cm

05

Toliet
Spray Kits

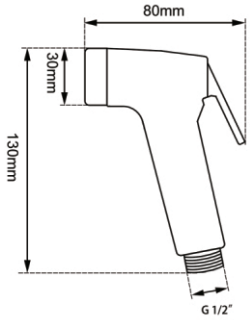

CH0006E.SH

Toilet Spray Kit 1.2m Stainless Steel Hose
Finish: Chrome
Material:ABS
Weight: 1.5kg
Package Size: 20.5X14.5X9.5cm

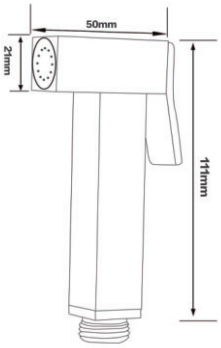

CH0009E.SH/OX0009E.SH/
BU0009E.SH/GM0009E.SH

Toilet Spray Kit 1.2m PVC Hose
Finish: Chrome/Matte Black/
Brushed Nickel/Gun Metal Grey
Material:Brass
Weight: 1.5kg
Package Size: 26.5X14X9.5cm

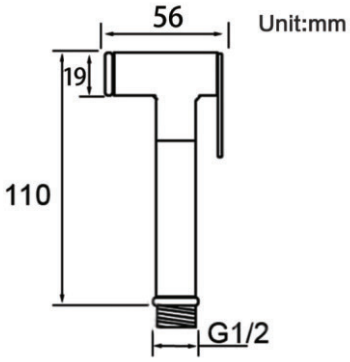

Ch0011E.SH/OX0011E.SH

Toilet Spray Kit 1.2m PVC Hose
Finish: Chrome/Matte Black
Material:Brass
Weight: 1.5kg
Package Size: 26.5X14X9.5cm

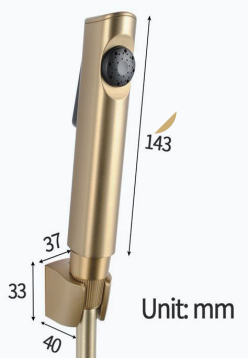

BUYG0005E.SH

Toilet Spray Kit 1.2m PVC Hose
Finish: Brushed NickelYellow Gold
Material:ABS
Weight: 1.5kg
Package Size: 20.5X14.5X9.5cm

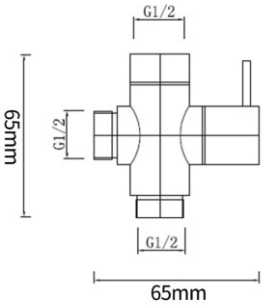

CH001.ST/OX001.ST

Toilet Bidet Tap
Finish: Chrome/Matte Black
Material:Brass
Weight: 0.5kg
Package Size: 7X7X5cm

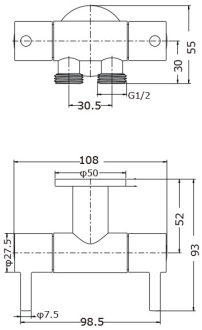

CH003.ST/OX003.ST

Toilet Bidet Tap
Finish: Chrome/Matte Black
Material:Brass
Weight: 0.7kg
Package Size: 10.8X12.3X8cm

06

Grate Drain & Pop Up Waste

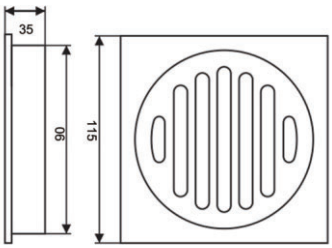

CH002.FD/OX002.FD

Grate Drain, 90mm Outlet
Finish: Chrome/Matte Black
Material:Brass

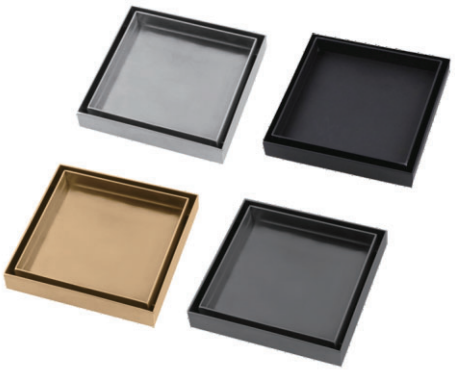

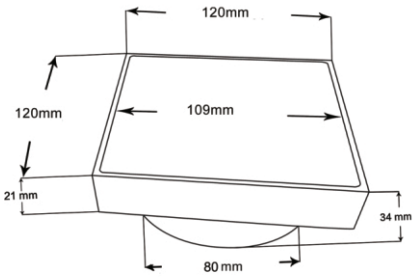

CH003.FD/OX003.FD/
BUYG003.FD/GM003.FD

Grate Drain, 80mm Outlet
Finish: Chrome/Matte Black/Brushed/
Yellow Gold/Gun Metal Grey
Material:Brass

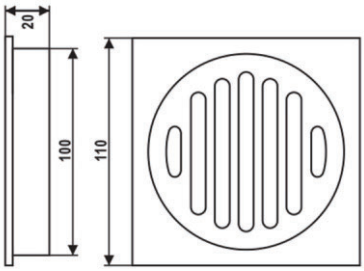

CH004.FD/OX004.FD

Grate Drain, 100mm Outlet
Finish: Chrome/Matte Black
Material:Brass

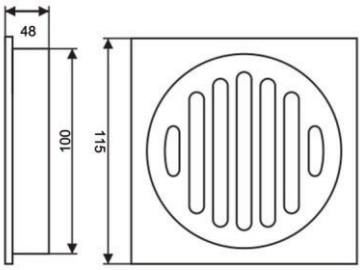

CH005.FD/OX005.FD

Grate Drain, 100mm Outlet
Finish: Chrome/Matte Black
Material:Brass

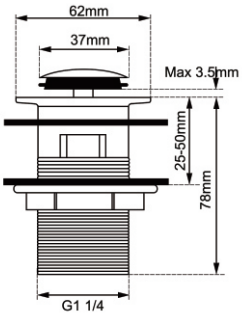

Pop Up Waste With Overflow

CH001.PUW/OX001.PUW/GM001.PUW
BUYG001.PUW

Finish: Chrome/Matte Black/Gun Metal Grey/
Brushed Yellow Gold
Material: Brass
Weight: 0.3kg
Package Size: 9.5X7.5X7.5cm

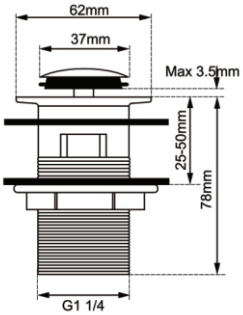

Pop Up Waste No Overflow

CH001.PUW/OX001.PUW/GM001.PUW
BUYG001.PUW

Finish: CH002.PUW/OX002.PUW/GM002.PUW/
BUYG002.PUW
Material: Brass
Weight: 0.3kg
Package Size: 9.5X7.5X7.5cm

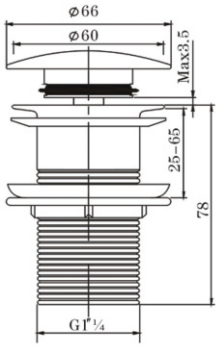

Mushroom Pop Up Waste No Overflow

CH003.PUW/OX003.PUW/BU003.PUW/
BUYG003.PUW/GM003.PUW

Finish: Chrome/Matte Black/Brushed/
Yellow Gold/Gun Metal Grey
Material: Brass
Weight: 0.3kg
Package Size: 9.5X7.5X7.5cm

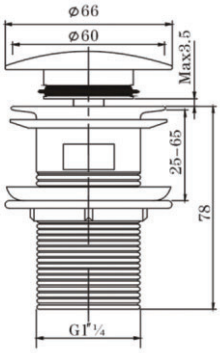

Mushroom Pop Up Waste With Overflow

CH004.PUW/OX004.PUW/BU004.PUW/
BUYG043.PUW/GM004.PUW

Finish: Chrome/Matte Black/Brushed/
Yellow Gold/Gun Metal Grey
Material: Brass
Weight: 0.3kg
Package Size: 9.5X7.5X7.5cm

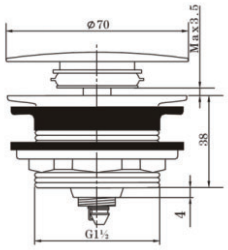

Mushroom Bathtub Pop Up Waste No Overflow

CH002.TWN/OX002.TWN/BU002.TWN
BUYG002.TWN//BUGM002.TWN

Finish: Chrome/Matte Black/Brushed/
Yellow Gold/Gun Metal Grey
Material: Brass
Weight: 0.3kg
Package Size: 8.5X5.5X8.5cm

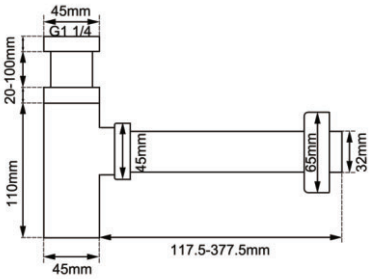

CH001.BT/OX001.BT/BU001.BT/

Bottle Trap
Finish: Chrome/Matte Black/Brushed/
Yellow Gold/Gun Metal Grey
Material: Brass
Weight: 1.5kg
Package Size: 32X11X7cm